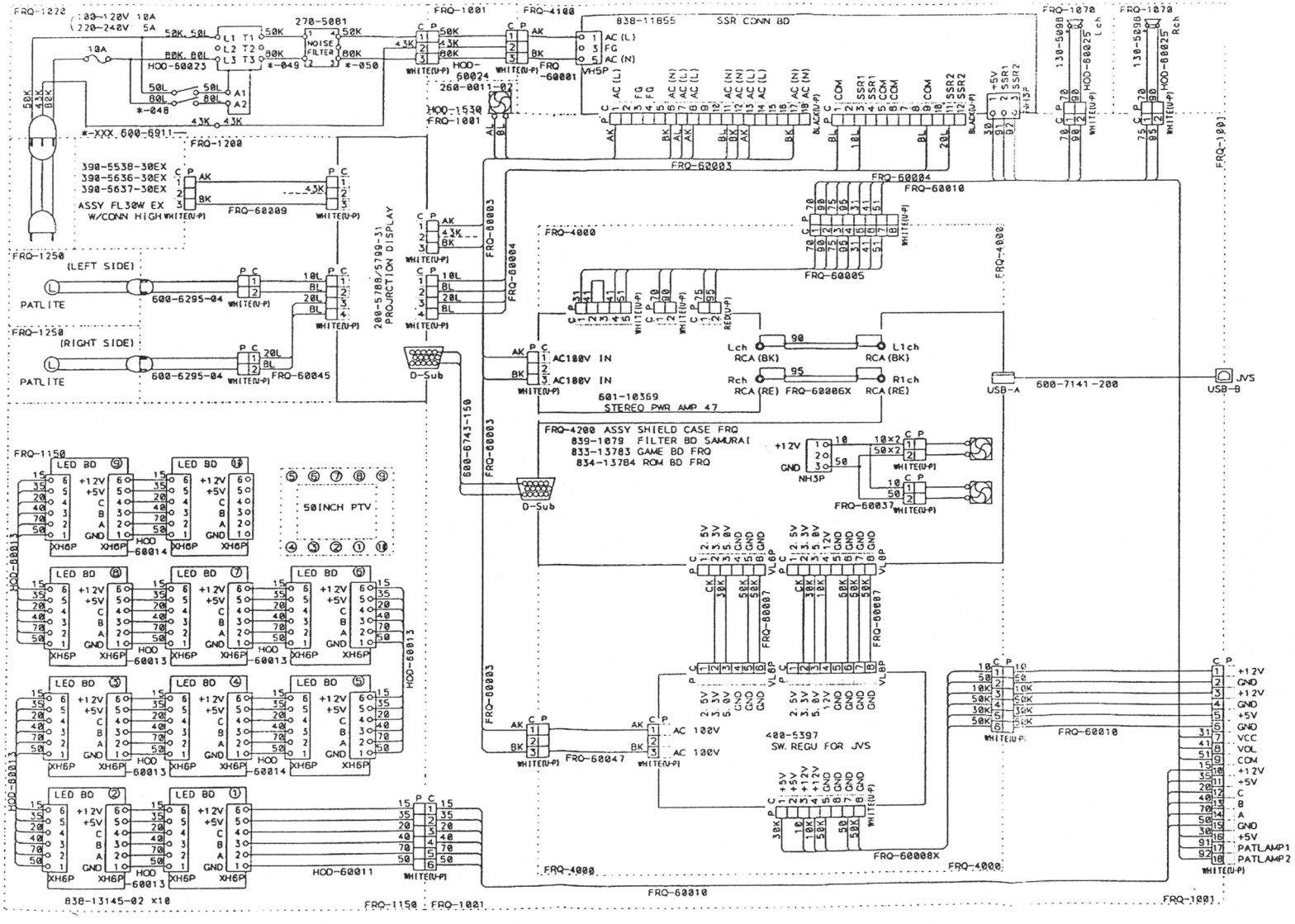

20. WIRING DIAGRAM (D-1/2)